QUASI-STATIC FINITE ELEMENT ANALYSIS OF A 3D PRINTED CUBESAT MONOCOQUE CHASSIS USING ANSYS TECHNICAL STRUCTURAL REPORT 001 v.A

FEA Report: Stress, Strain, and Modal Analysis

SINAG

Structural and Mechanism Team
Spacecraft Platform & Ground Systems Division
Department of Aerospace Engineering, Indiana Aerospace University

Francis Mike John Camogao

January 19, 2026

Abstract

This report details the structural analysis of a 2U CubeSat monocoque chassis constructed from Polycarbonate filament via Fused Deposition Modeling (FDM). The objective was to verify the structural integrity of the satellite under a conservative worst-case compressive load of 980 N (100 kgf) and to assess dynamic stability. The simulation utilized ANSYS Mechanical with a refined mesh to determine stress, deformation, and natural frequency. Results indicate a maximum deformation of 0.124 mm and a maximum stress of 10.0 MPa. While the theoretical Factor of Safety is 5.98, the **adjusted Factor of Safety for FDM anisotropy is 3.98**, which still exceeds flight requirements. Furthermore, modal analysis confirmed a fundamental frequency of 309.05 Hz, satisfying the > 100 Hz stiffness requirement for launch vehicles.

Keywords: Finite Element Analysis, Cube Satellite, 2U, Monocoque Chassis, Modal Analysis, Factor of Safety, Polycarbonate, 3D Printing.

1 METHODOLOGY AND MATERIAL SETUP

1.1 Geometric Parameters

The geometry consists of a standard 2U form factor following the strict requirement defined by the **CubeSat Design Specification (CDS)**, originally developed by CalPoly.

- **External Dimensions:** $100mm \times 100mm \times 227mm$.
- **Internal Usable Volume**: A central void of $80mm \times 90mm \times 194mm = 1{,}396{,}800mm^3$.
- **Rail Configuration:** The chassis utilizes 10mm wide corner rails with a 17mm (top) and 10mm (bottom) standoff protrusion.

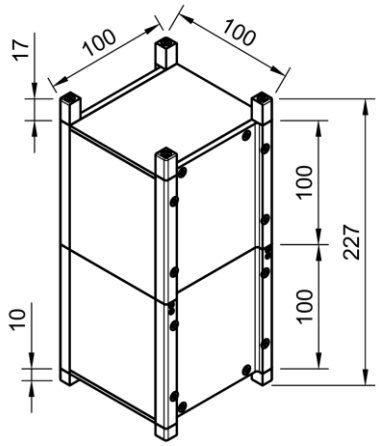

To adhere to finite element node limits, the geometry non-structural cosmetic threads and fasteners were defeatured, and bonded contacts were used to simulate a unified structure.

1.2 Material Properties

The monocoque chassis material was defined as **Polycarbonate** with the following isotropic properties:

- **Young's Modulus** (E): 2.4 GPA
- **Poisson's Ratio** (ν): 0.37
- **Tensile Yield Strength** (σ_{yield}): 60Mpa
- **Density** (ρ): $1200\,\frac{kg}{m^3}$

Polycarbonate material was specifically decided to be used due to its nature of being one of the strongest "accessible" materials. It is used in bulletproof glass and cockpit canopies. For a CubeSat structure, it offers the rigidity needed to survive launch vibrations.

- **Thermal Stability**: Heat Deflection Temperature (HDT) is around **110°C to 140°C**.
- **Printing Temperature**: 270°C - 310°C.
- **Pros:** Extremely tough; will not snap under load. Incredible impact resistance.
- **Cons:** Prone to warping; requires an enclosure (even a cardboard box over the printer helps).

1.3 Mesh Strategy

A global element size of **5mm (0.005m)** was applied to control the node count, sizing resolution value of **2**, and quality smoothing was set to **Low**, allowing us to be within the ANSYS academic license limit (< 128,000 nodes), while maintaining sufficient density to capture stress transfer through the primary load paths.

2 BOUNDARY CONDITIONS AND LOADING CASE

To simulate the physical environment of a rocket launch (P-POD deployment phase), the following lowing boundary conditions were applied:

2.1 Fixed Support (Grounding)

A **Fixed Support** was applied to the bottom faces of the four chassis bottom standoff protrusions. This constrains all six degrees of freedom (DOF), representing the interface where the CubeSat is mechanically locked into the deployer.

2.2 Loading Scenario: The "100kg" Case

A static force of **980N** (100kgf) was applied to the top faces of the four chassis top standoff protrusions in the negative Z-direction (pointing down).

- **Physical Analogy**: Applying 980N to a $\approx 1.33\ kg$ satellite is equivalent to a **75g acceleration load.**
- **Justification:** Standard launch vehicles (e.g., Falcon 9) typically experience Max-Q loads of 6g to 10g, likewise the rocket during ascent (Stage 1) experiences **3.2g** just before stage separation and more g-forces (**4.1g**) experienced when powered by Stage 2 (closer to approaching escape velocity) [3]. Testing 75g serves as a robust "torture test," verifying survival capabilities far beyond nominal flight envelopes.
- **Force Direction Breakdown**
  - **Rocket Acceleration:** +Z (Upwards)
  - **Inertial Force (G-Load):** -Z (Downwards/Opposite to motion)
  - **Result:** The satellite is "crushed" between its own inertia and the P-POD structure.

- **Why "Foot towards Up" would be wrong**
  - If we applied the force *from the foot towards the top* (pulling away), we would be simulating the satellite **hanging** or being pulled apart (Tension). This does not happen during launch or deployment. The primary threat during launch and deployment is **Compression** (Buckling/Crushing), which is exactly what we are simulating.

3.3 SIMULATION RESULTS

3.1 Total Deformation

The structure exhibits high rigidity under the applied load.

- **Maximum Deflection:** $1.2435 \times 10^{-4}\ m\ (0.1244mm)$
- **Conclusion**: The deflection is negligible (<0.15mm), ensuring no internal components will contact the chassis walls.

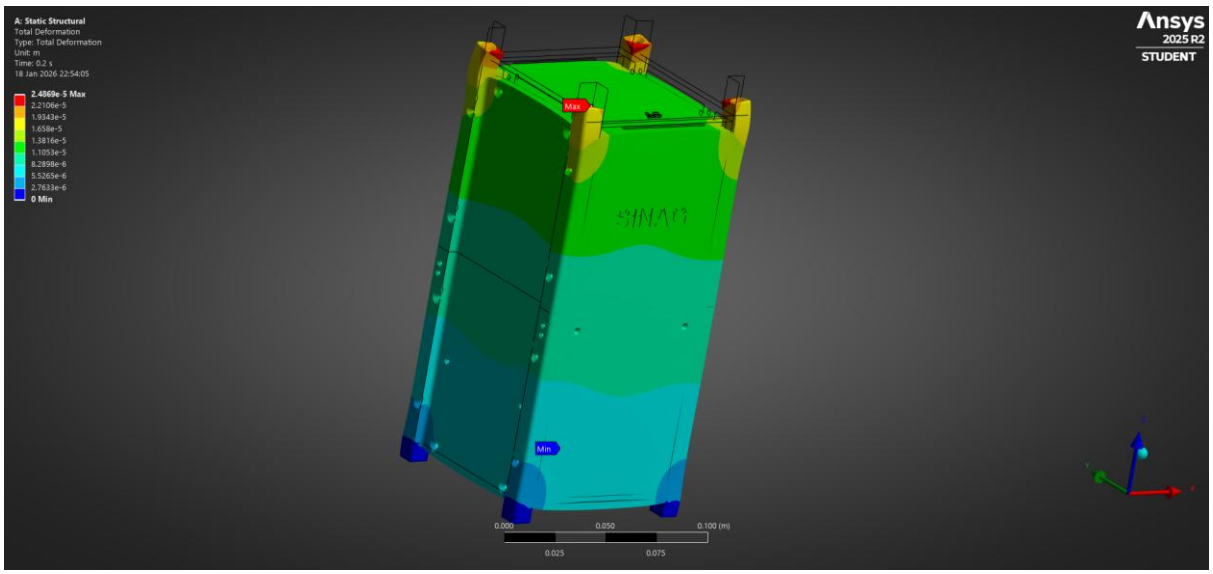

Figure 1: Total Deformation of 2U Chassis under 980N Load.

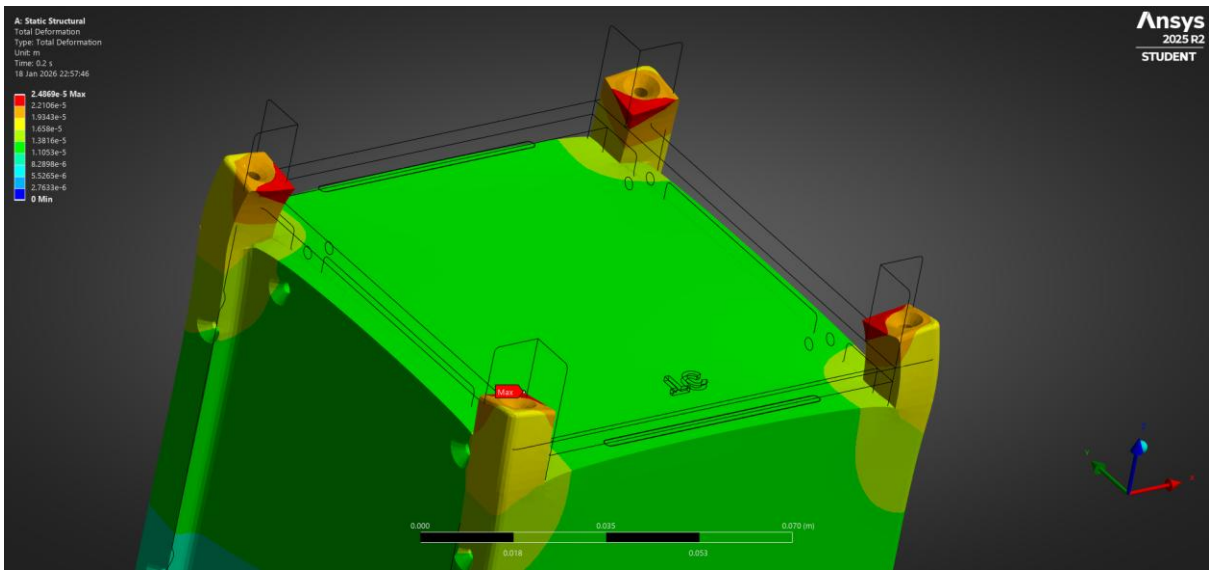

Figure 2: Total Deformation of 2U Chassis under 980N Load (close up top section).

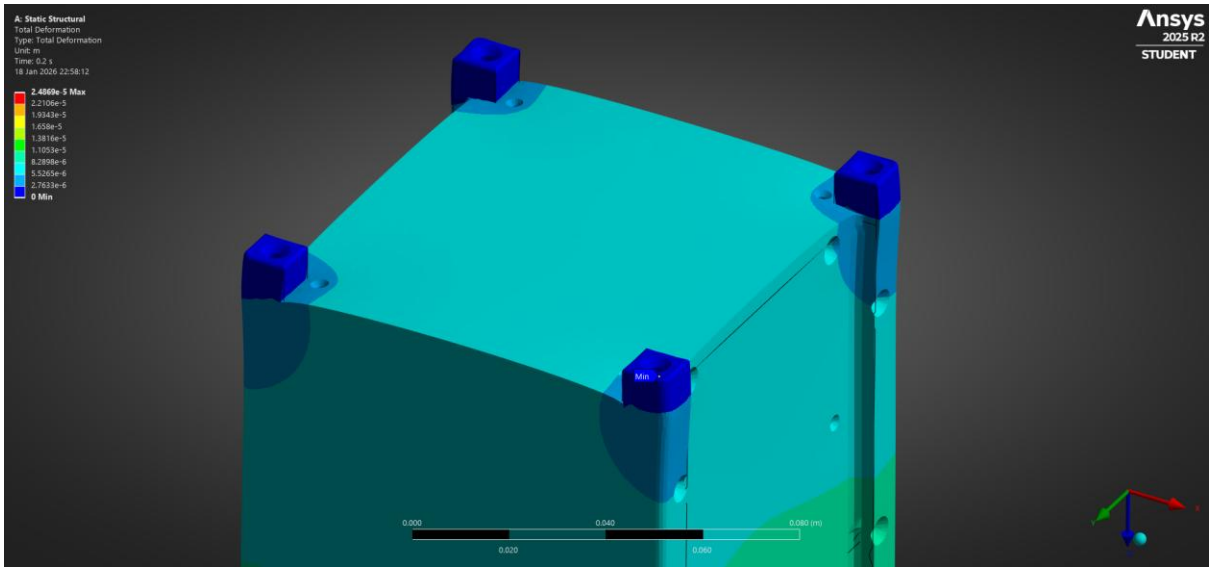

Figure 3: Total Deformation of 2U Chassis under 980N Load (close up bottom section).

3.2 Equivalent (von Mises) Stress

Stress concentrations were observed at the contact interface between the rails and the feet, which is the expected load path.

- **Maximum Stress:** $1.0025 \times 10^7 Pa$ $(10.03\ MPa)$
- **Average Stress:** Significantly lower than the peak, indicating localized concentration rather than global failure.

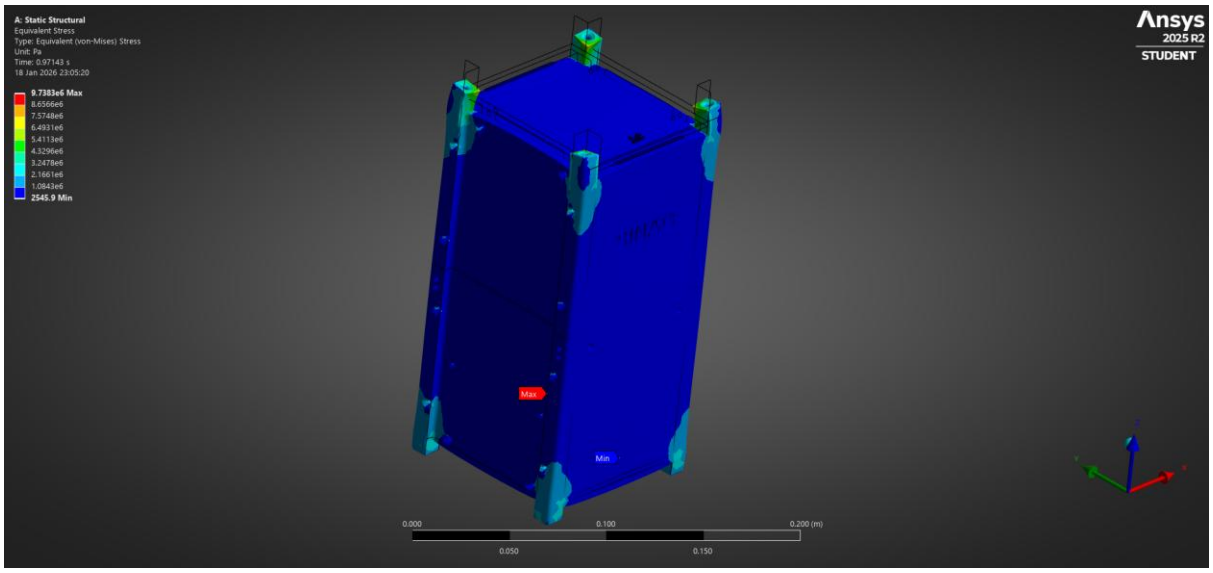

Figure 4: Equivalent (von Mises) Stress Distribution.

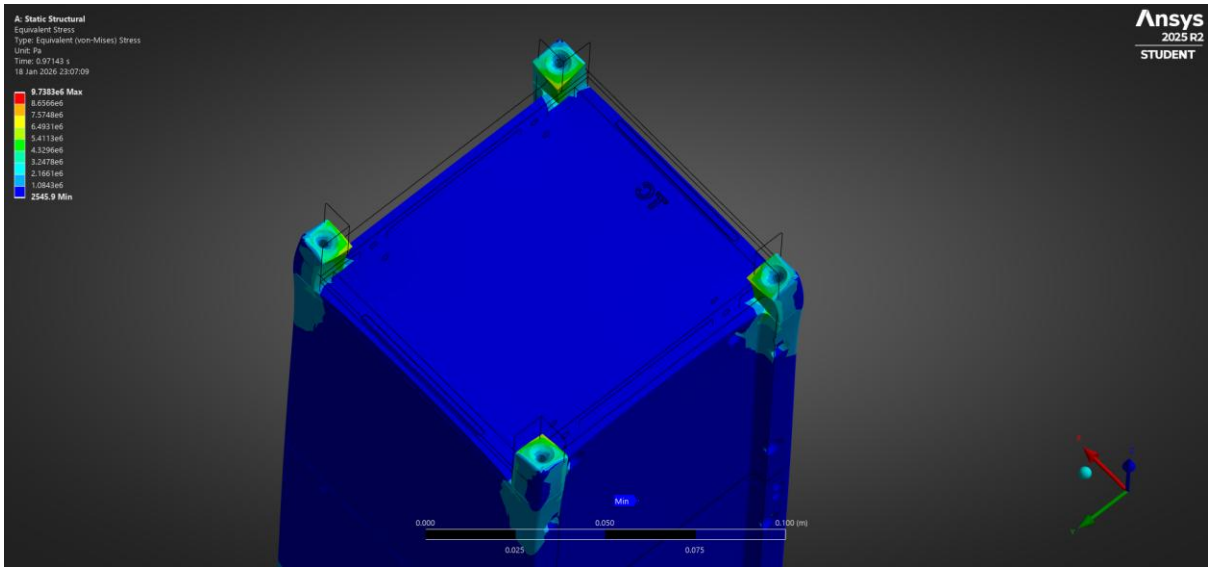

Figure 5: Equivalent (von Mises) Stress Distribution (close up top section).

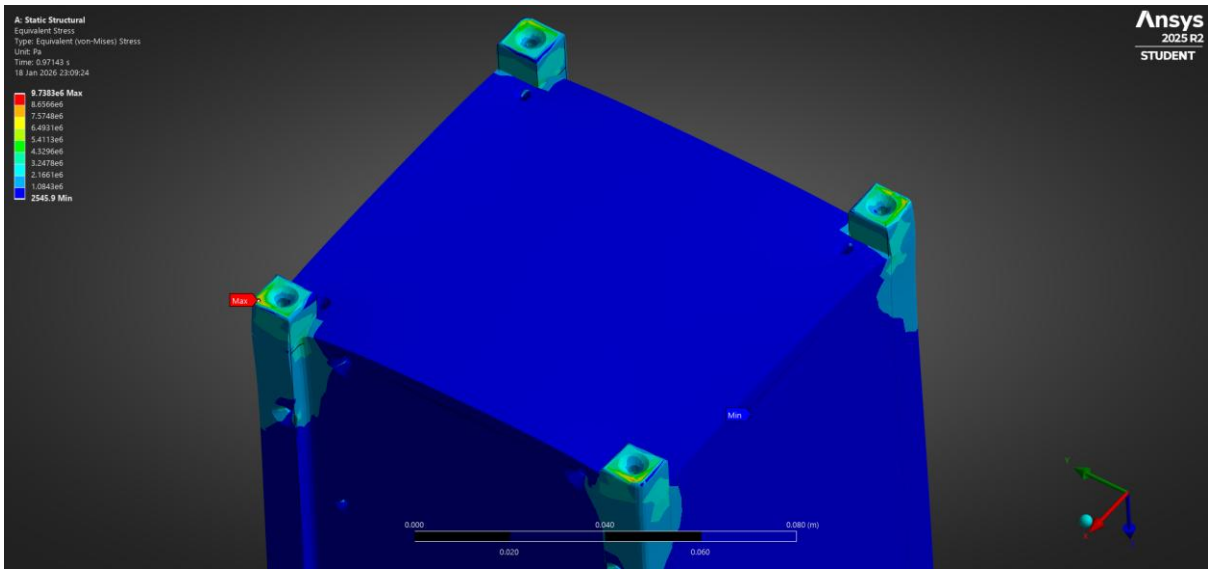

Figure 6: Equivalent (von Mises) Stress Distribution (close up bottom section).

Intentionally left blank.

4 DISCUSSION AND VERIFICATION

4.1 Factor of Safety (Fos) Calculation

Using the Von Mises Yield Criterion, the Factor of Safety is calculated as:

$$FoS = \frac{\sigma_{yield}}{\sigma_{max}} = \frac{60\ MPa}{10.03\ MPa} = \mathbf{5.98} \tag{1}$$

The structure possesses a safety margin of nearly 600%, exceeding the standard aerospace requirements of FoS ≥ 2.0.

4.2 Analytical Verification and Structural Efficiency

To validate the FEA results, an analytical check was performed using the axial stiffness equation.

$$A_{eff} = \frac{P\ \times L}{\delta \times E} \tag{2}$$

Solving for the Effective Area (A_{eff}) using the actual simulation parameter (E = 2.4 GPa) and result $\delta = 1.2435 \times 10^{-4} m$:

$$A_{eff} = \left(\frac{980\ N\ \times 0.227m}{(1.2435 \times 10^{-4} m) \times (2.4 \times 10^{9}\ Pa)}\right) * \frac{1000000mm}{1m} \approx \mathbf{745.4094mm^2} \tag{3}$$

4.2.1 Comparison with Geometric Theory

Based on the chassis dimensions (External: 100 × 100 mm, Internal Void: 80 × 90 mm), the theoretical area of a solid extruded profile would be:

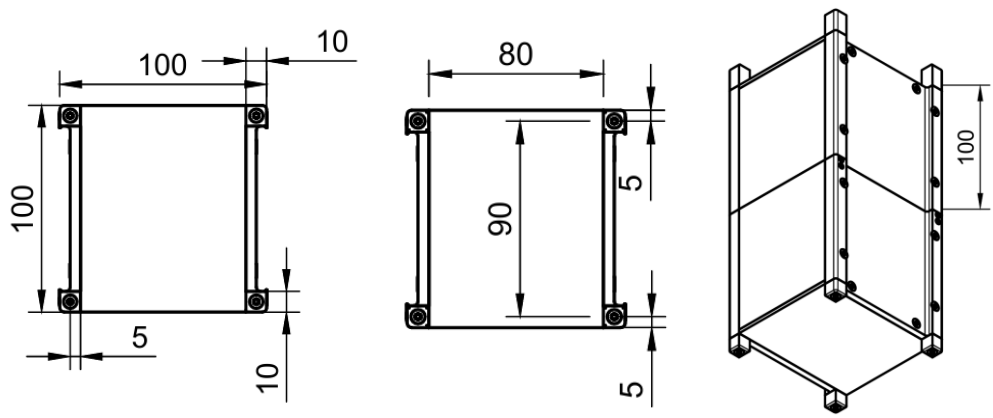

$$A_{theo} = (100 \times 100) - (80 \times 90) = 2{,}800\ mm^2 \tag{4}$$

The calculated effective area ($745mm^2$) is approximately **26.6%** of the theoretical solid area ($2{,}800mm^2$). This reduction is physically consistent with the chassis design, which incorporates significant lightweighting features (cutouts, access ports, and rail profiles) rather than solid walls. The FEA accurately captures this reduction in stiffness due to geometry removal, validating the model's fidelity.

4.3 Manufacturing Considerations: Additive Manufacturing

The proposed chassis utilizes a monocoque design to be manufactured via Fused Deposition Modeling (FDM) using Polycarbonate filament. Unlike isotropic injection-molded parts, FDM parts exhibit anisotropic mechanical properties due to layer adhesion limits [7].

4.3.1 Derating for Inter-Layer Strength

While standard Polycarbonate has a yield strength of ≈ 60 MPa, the Z-axis tensile strength of FDM-printed Polycarbonate is typically 50% to 70% of the bulk material strength due to potential delamination risks [8].

- **Derated Yield Strength ($\boldsymbol{\sigma_{FDM}}$):** ≈ 40MPa (Conservative Estimate):
- **Adjusted Factor of Safety:**

$$FoS_{adjusted} = \frac{40\ MPa}{10.03\ MPa} = \mathbf{3.98} \tag{5}$$

Even with this conservative derating for manufacturing defects, the structure maintains a Factor of Safety of nearly **4.0**, which remains well above the safety margin required for flight.

4.3.2 Print Orientation Strategy

To maximize structural integrity, the chassis should be printed in an orientation that aligns the continuous filament strands with the primary load paths (Rails). If printed vertically (Z-axis), the layer lines are perpendicular to the launch load, minimizing shear stress on the layer bonds.

4.4 Modal Analysis and Dynamic Stiffness

In addition to static structural integrity, the dynamic characteristics of the chassis were analyzed to ensure the fundamental natural frequency exceeds a standard launch vehicle requirement of > 100 Hz, example the Falcon 9 minimum stiffness requirement is 100 Hz [3].

4.4.1 Boundary Conditions

A modal analysis was performed with the same "Fixed Support" boundary conditions applied to the chassis feet, representing the constrained state within the P-POD deployer. No external loads were applied, as modal analysis is dependent only on mass and stiffness matrices.

Intentionally left blank.

4.4.2 Natural Frequency Results

The simulation calculated the first six resonant modes of the structure. The fundamental frequency (Mode 1) was found to be **309.05 Hz**.

Table 1. First Six Natural Frequencies of the SINAG 2U Chassis

Mode	Frequency [Hz]	Mode Shape Description
1	309.05	First Bending (X-Axis)
2	313.51	First Bending (Y-Axis)
3	563.32	Torsional / Twisting
4	567.89	Second Order Bending
5	741.78	Plate Breathing Mode
6	816.67	Complex Combined Mode

4.4.3 Dynamic Verification

The fundamental frequency of 309.05 Hz is significantly higher than the 100 Hz minimum requirement defined in **GEVS (GSFC-STD-7000B)** [2]. This indicates that the monocoque chassis is sufficiently stiff to decouple its dynamic response from any low-frequency vibrations.

5 CONCLUSION

The Finite Element Analysis confirms that the proposed Polycarbonate 2U chassis is structurally sound. Under an extreme compressive load of 980N (75g equivalen), the monocoque structure exhibits minimal deformation (0.1244mm). While the theoretical Factor of Safety against yielding is **5.98**, the adjusted Factor of Safety accounting for additive manufacturing anisotropy is **3.98**. Both values significantly exceed the standard aerospace requirement of **FoS ≥ 2.0**. Furthermore, the modal analysis confirms a fundamental frequency of **309.05 Hz**, well above the 100 Hz avoidance limit [2], ensuring dynamic stability. The design is deemed safe for flight qualification testing.

5.1 Recommendations

To further validate these simulation results, the following actions are recommended:

1. **Tensile Testing of Printed Parts:** Perform destructive testing on 3D-printed Polycarbonate samples to verify the actual Z-axis layer adhesion strength used in the derating calculations.

2. **Modal Analysis:** Conduct a physical modal frequency simulation to ensure the chassis's natural frequency exceeds a launch vehicle's minimum stiffness requirement (typically > 100 Hz, e.g., Falcon 9 rocket [3]).

3. **Vibration Table Testing:** Subject the physical prototype to random vibration testing to verify the integrity of the printed monocoque structure under dynamic loads.

References

[1] California Polytechnic State University, CubeSat Design Specification (CDS), Revision 14.1, San Luis Obispo, CA, 2022. https://www.cubesat.org/cubesatinfo

[2] NASA Goddard Space Flight Center, GSFC-STD-7000B: General Environmental Verification Standard (GEVS) for GSFC Flight Programs and Projects, Greenbelt, MD, 2021. https://standards.nasa.gov/standard/GSFC/GSFC-STD-7000

[3] SpaceX, Falcon 9 User's Guide, Revision 2.0, Hawthorne, CA, 2020. https://www.spacex.com/media/falcon_users_guide.pdf

[4] Budynas, R. G., and Nisbett, J. K., Shigley's Mechanical Engineering Design, 10th Ed., McGraw-Hill Education, New York, 2015.

[5] MatWeb Material Property Data, Polycarbonate (PC), Unreinforced, Extruded, Accessed: Jan 2026. http://www.matweb.com

[6] Material Property Data For Engineering Materials, ANSYS: https://www.ansys.com/content/dam/amp/2021/august/webpage-requests/education-resources-dam-upload-batch-2/material-property-data-for-eng-materials-BOKENGEN21.pdf

[7] Bellini, A., and G¨uc¸eri, S., "Mechanical Characterization of Parts Fabricated Using Fused Deposition Modeling," Rapid Prototyping Journal, Vol. 9, No. 4, pp. 252-264, 2003.

[8] Stratasys, FDM Thermoplastic Filament: Polycarbonate (PC) Material Data Sheet, Eden Prairie, MN, 2023. https://www.stratasys.com

---

ADDENDUM: Design Iteration Note

This document contains simulation data for the **first design iteration (001 v.A)** of the SINAG 2U CubeSat chassis. The analysis presented herein establishes the baseline structural performance of the primary monocoque frame. Future testing and simulation reports will be drafted following subsequent design iterations, which will incorporate detailed component placement, specific mounting interfaces, and access ports. This current version represents the geometric baseline excluding minor component mounting features; updated versions of this paper will analyze the structural impact of these detailed mechanical constraints once implemented.

End of Document.